Restagraf
1 Allée des Bouleaux -F-95110 SANNOIS
+33 (0)1 39 98 55 00
info@restagraf.com

PANEL CLIP Ø 8,2 mm DOOR TRIM



Item code	Number of References	Number of pieces	Conditioning
10790	1	12	BAG

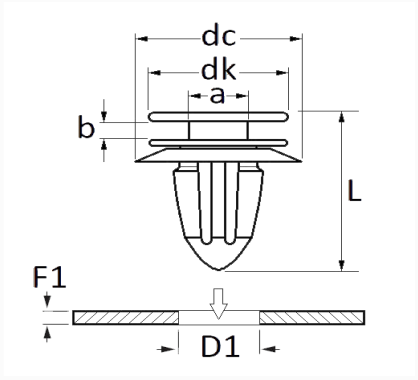

Technical informations	
dk	13 mm
dc	18.9 mm
b	2.9 mm
a	4.5 mm
L	18.6 mm
D1	8.2 mm
F1	0.6 → 1.5 mm

Materials
POLYACETAL & ELASTOMER

Manufacturer correspondence*			
FIAT	9654280780	FORD Engineering number	W715789S300

Manufacturer correspondence*			
FORD Finis	5179084	LANCIA	9654280780
PEUGEOT / CITROËN	6991Y8		

* Non contractual information given as indication