Restagraf
1 Allée des Bouleaux -F-95110 SANNOIS
+33 (0)1 39 98 55 00
info@restagraf.com

PLUG BUTTON Ø 14 → 15 mm



Item code	Number of References	Number of pieces	Conditioning
10714	1	12	BAG

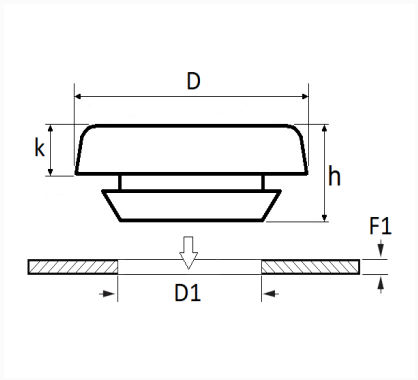

Technical informations	
D	21 mm
k	2.9 mm
h	6.7 mm
D1	14 → 15 mm
F1	0.7 → 1.5 mm

Materials
POLYPROPYLENE + EPDM

Manufacturer correspondence*			
AUDI	191971908E	SEAT	191971908E

Manufacturer correspondence*	
VOLKSWAGEN	191971908E

* Non contractual information given as indication