1 Allée des Bouleaux -F-95110 SANNOIS
+33 (0)1 39 98 55 00
info@restagraf.com

# PANEL CLIP Ø 10,5 mm DOOR AND INTERIOR TRIM

| Item code | Number of References | Number of pieces | Conditioning |
|---|---|---|---|
| 10713 | 1 | 8 | BAG |

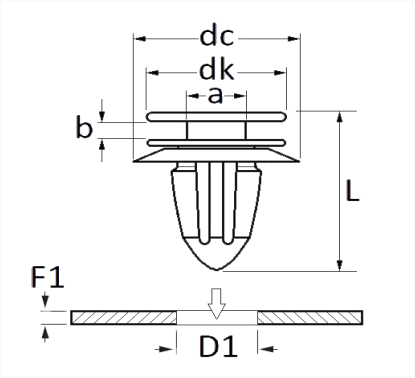


| Technical informations | |
|---|---|
| dk | 19 mm |
| dc | 22.8 mm |
| b | 2 mm |
| a | 8 mm |
| L | 21.6 mm |
| D1 | 10 mm |
| F1 | 3 mm |
| | |
| | |
| | |

| Materials |
|---|
| POLYACETAL & ELASTOMER |

| Manufacturer correspondence* | | | |
|---|---|---|---|
| AUDI | 8Z0867646 | AUDI | 8Z0868243 |
| | | | |

| Manufacturer correspondence* | |
|---|---|
| SEAT | 8Z0868243 |

* Non contractual information given as indication