1 Allée des Bouleaux -F-95110 SANNOIS
+33 (0)1 39 98 55 00
info@restagraf.com

TAPING-ON HARNESS CLIP Ø 6,5 mm WIRING HARNESS FIXING

Item code	Number of References	Number of pieces	Conditioning
10482	1	20	BAG

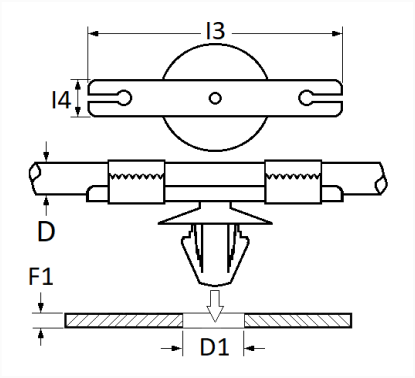

Technical informations	
l3	36.3 mm
l4	9.7 mm
D1	6.5 mm
F1	0.6 → 5.1 mm

Materials
POLYAMIDE 66

Manufacturer correspondence*			
DS Automobiles	6555WW	FORD Engineering number	E0VB13A506CA

Manufacturer correspondence*			
FORD Finis	6329678	PEUGEOT / CITROËN	6555WW
RENAULT	8200270441		

* Non contractual information given as indication