1 Allée des Bouleaux -F-95110 SANNOIS
+33 (0)1 39 98 55 00
info@restagraf.com

PLASTIC GROMMET Ø 9 mm BODY SHELL BELTLINE MOULDING

Item code	Number of References	Number of pieces	Conditioning
10326	1	6	BAG

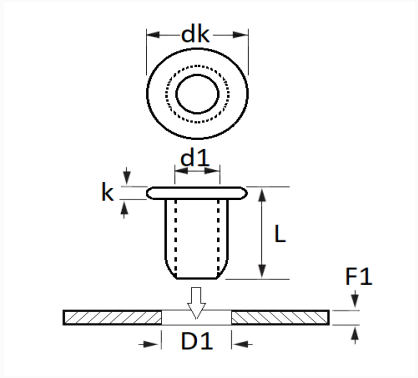

Technical informations	
dk	12 mm
k	1.3 mm
L	8 mm
d1	4.5 mm
D1	9 mm
F1	0.8 → 1 mm

Materials
POLYAMIDE 66

Manufacturer correspondence*	
B.M.W	51711932996

* Non contractual information given as indication