1 Allée des Bouleaux -F-95110 SANNOIS
+33 (0)1 39 98 55 00
info@restagraf.com

# CLIP HOSE CLAMP Ø 18 mm L = 8 mm



| Item code | Number of References | Number of pieces | Conditioning |
|---|---|---|---|
| 7580 | 1 | 10 | BAG |
| 227580 | 1 | 2 | BLISTER |

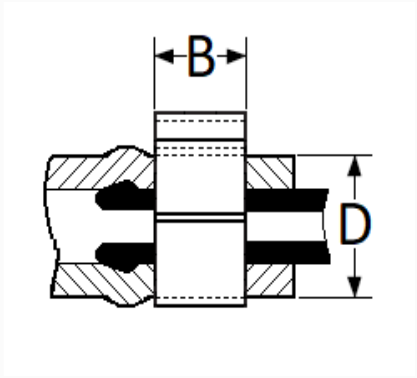


| Technical informations | |
|---|---|
| D | 18.5 → 20 mm |
| B | 8 mm |
| | |
| | |
| | |
| | |
| | |
| | |
| | |
| | |

| Materials |
|---|
| X5Cr Ni18/10 STAINLESS STEEL |