1 Allée des Bouleaux -F-95110 SANNOIS
+33 (0)1 39 98 55 00
info@restagraf.com

CLIP HOSE CLAMP Ø 16 mm L = 8 mm

Item code	Number of References	Number of pieces	Conditioning
7578	1	10	BAG
227578	1	2	BLISTER

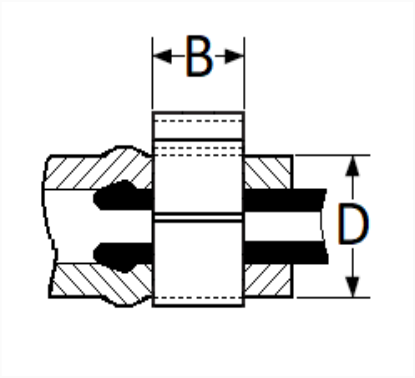

Technical informations	
D	16.5 → 18 mm
B	8 mm

Materials
X5Cr Ni18/10 STAINLESS STEEL