Restagraf
1 Allée des Bouleaux -F-95110 SANNOIS
+33 (0)1 39 98 55 00
info@restagraf.com

DICHTUNG FÜR ÖLABLASSSTOPFEN Ø 11 X 21 X 2,5 mm GUMMI FLACH



Item code	Number of References	Number of pieces	Conditioning
7389	1	10	BEUTEL
227389	1	3	BLISTER

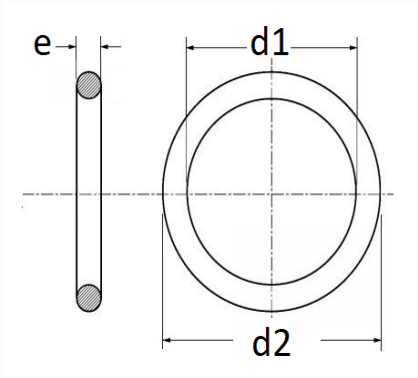

Technical informations	
d1	11 mm
d2	21 mm
e	2.5 mm

Materials
GUMMI

Manufacturer correspondence*			
ALTERNATIVE ZU FORD	2505993	ALTERNATIVE ZU OPEL	12616850

Manufacturer correspondence*			
FIAT	71739194	FORD Werksnummer	YS4Z6734AA
OPEL (GM) Katalognummer	652526	OPEL (GM) Teilenummer	03536966
OPEL (GM) Teilenummer	3536966	RENAULT SAMSUNG MOTORS	0329810

* Non contractual information given as indication