1 Allée des Bouleaux -F-95110 SANNOIS
+33 (0)1 39 98 55 00
info@restagraf.com

VERZONKEN SCHROEF M8-1.25 X 17 mm REMSCHIJF

Item code	Number of References	Number of pieces	Conditioning
7276	1	20	
227276	1	4	

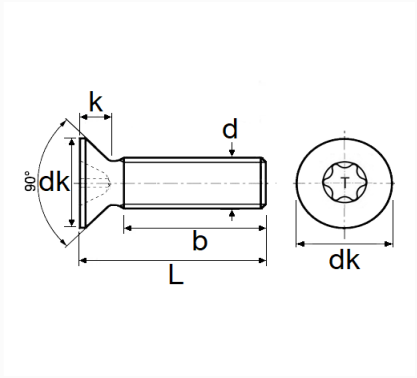

Technical informations	
dk	14.5 mm
k	4 mm
L	17 mm
b	8 mm
d	M8 x 1.25

Materials
STAAL KLASSE 8.8

Manufacturer correspondence*			
RENAULT	7703004128	RENAULT	7703004176

* Non contractual information given as indication