1 Allée des Bouleaux -F-95110 SANNOIS
+33 (0)1 39 98 55 00
info@restagraf.com

SECHSKANTMUTTER EDELSTAHL A4 M6-1.00 DIN 934

Item code	Number of References	Number of pieces	Conditioning
7253	1	50	BEUTEL

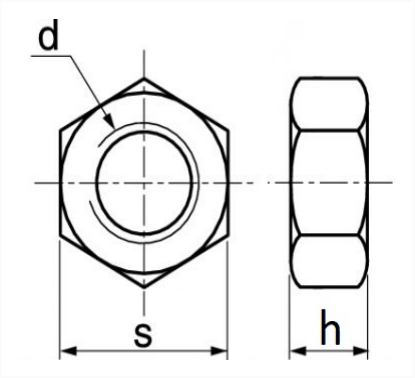

Technical informations	
s	10 mm
h	5 mm
d	M6 x 1.00

Materials
EDELSTAHL A4