1 Allée des Bouleaux -F-95110 SANNOIS
+33 (0)1 39 98 55 00
info@restagraf.com

# STAKE NUT M20-1.50 FOR BALL BEARING HUB AND DRIVESHAFT

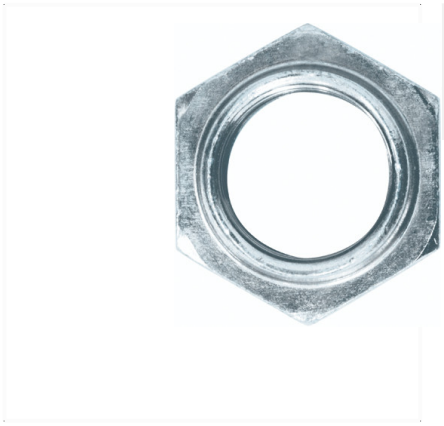

| Item code | Number of References | Number of pieces | Conditioning |
|---|---|---|---|
| 7245 | 1 | 2 | BAG |

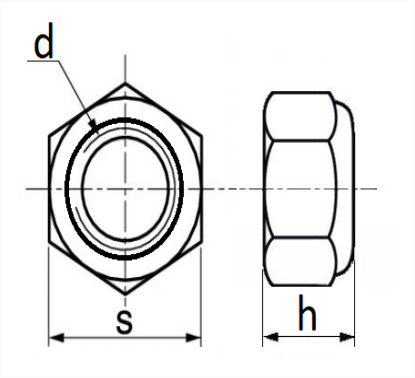


| Technical informations | |
|---|---|
| s | 30 mm |
| h | 18.3 mm |
| d | M20 x 1.50 |

| Materials |
|---|
| CLASS 8 STEEL |

| Manufacturer correspondence* | |
|---|---|
| PEUGEOT / CITROËN | 329714 |

* Non contractual information given as indication