1 Allée des Bouleaux -F-95110 SANNOIS
+33 (0)1 39 98 55 00
info@restagraf.com

SELBSTSICHERNDE MUTTER M22-1,50 FÜR NABENLAGER UND KARDAN

Item code	Number of References	Number of pieces	Conditioning
7244	1	2	BEUTEL

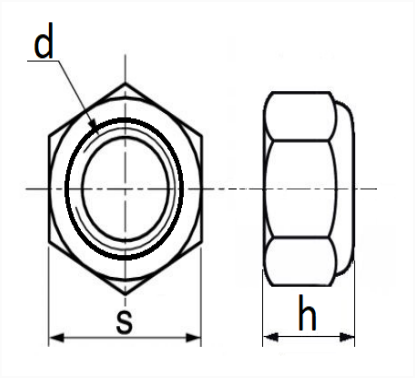

Technical informations	
s	32 mm
h	16.7 mm
d	M22 x 1.50

Materials
STAHL 8

Manufacturer correspondence*	
PEUGEOT / CITROËN	693541

* Non contractual information given as indication