1 Allée des Bouleaux -F-95110 SANNOIS
+33 (0)1 39 98 55 00
info@restagraf.com

PLATTE SLUITRING Ø 8 X 20 X 1,5 mm



Item code	Number of References	Number of pieces	Conditioning
516	1	55	
220516	1	33	

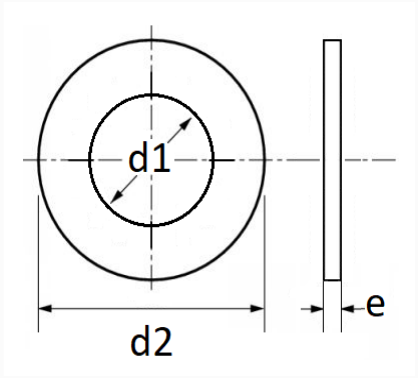

Technical informations	
d1	8.4 mm
d2	20 mm
e	1.5 mm

Materials
STAAL

Manufacturer correspondence*	
RENAULT	7703053334

* Non contractual information given as indication