1 Allée des Bouleaux -F-95110 SANNOIS
+33 (0)1 39 98 55 00
info@restagraf.com

PEELED RIVET Ø 4 X 26 mm WITH BLACK CHAPO® FOR NUMBERPLATE

Item code	Number of References	Number of pieces	Conditioning
4998	2	300	BOX
4778	2	60	BAG

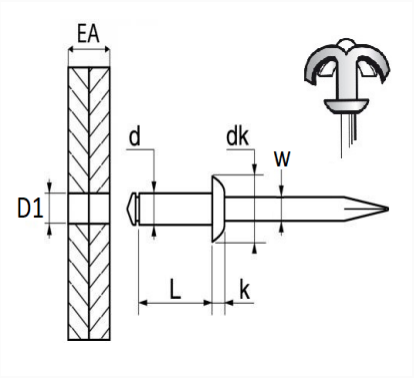

Technical informations	
d	3.8 mm
L	26 mm
dk	8 mm
k	1.5 mm
w	2.2 mm
EA	16 → 21 mm
D1	4 → 4.2 mm

Materials
ALUMINIUM ALLOY / STEEL STEM