1 Allée des Bouleaux -F-95110 SANNOIS
+33 (0)1 39 98 55 00
info@restagraf.com

PEELED RIVET Ø 4 X 16 mm WITH BLUE CHAPO® FOR NUMBERPLATE

Item code	Number of References	Number of pieces	Conditioning
4781	2	400	BOX
4779	2	68	BAG
228439	2	8	BLISTER

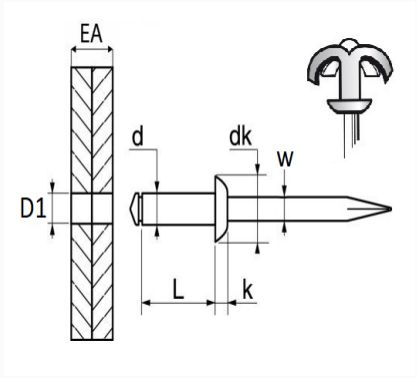

Technical informations	
d	3.8 mm
L	15.7 mm
dk	8 mm
k	1.2 mm
w	2.22 mm
EA	8 → 11 mm
D1	4 → 42 mm

Materials
ALUMINIUM ALLOY / STEEL STEM